Proceedings of the 26th International Conference on
Port and Ocean Engineering under Arctic Conditions
June 14-18, 2021, Moscow, Russia

Determination of Design Ice Loads on Ship Hull Using Specialized Software

Vladimir V. Yakimov[1], Georgiy E. Egiazarov[2], Tatiana I. Letova[3]
[1] LLC Bureau Hyperborea, Saint Petersburg, Russia
[2] Vyborg Shipyard, Vyborg, Russia
[3] Peter the Great St. Petersburg Polytechnic University, Saint Petersburg, Russia

ABSTRACT

The ice strengthened structures of ship hull have to accept and to withstand the appropriate design ice loads, and therefore their correct estimation should be treated as a priority task. This article presents and studies two main interlinked approaches to determining the ice-induced loads acting on ship hull that are regulatory calculation and direct calculation. The first one is based on accounting for requirements of regulatory documentation, and the second one implies involving the physical models for mechanical interaction between ship hull and ice cover. The brief overview is done concerning the specialized software intended to implement the direct calculation of local and global ice loads on ship hull and found application in the national engineering practice. The general description is given concerning the computer programs being relevant to date and developed with the direct participation of authors. With regard to the specified computer programs, the key aspects are outlined related to the development and execution environment, the structural configuration and implementation sequence, the input and output data arrangement. The particular attention is paid to the comparative analysis of their functional capabilities, the results of which are submitted in a systematized manner. The conclusion is drawn that application of direct calculation methods to assess and to forecast the external environmental effects of any nature, including ice effects, on marine infrastructure facilities conforms to the contemporary worldwide trends to the full extent. Proceeding from this fact, their comprehensive introduction into the real process of designing the ice-going ships appears to be reasonable and demanded, but at the same time requires the availability of specialized software.

KEY WORDS: Ice Load; Ship Hull; RS Rules; Direct Calculation; Specialized Software.

NOMENCLATURE

ACEA – Association of Centres for Engineering and Automation

BV – Bureau Veritas

CNIIMF – Central Marine Research and Design Institute

IACS – International Association of Classification Societies

ISO – International Organization for Standardization

KSRC – Krylov State Research Centre

KSRI – Krylov Shipbuilding Research Institute (since 2012, referred to as the KSRC)

LLC – limited liability company

LSI – Leningrad Shipbuilding Institute (since 1992, referred to as the SMTU)

RN – registration number

RS – Russian Maritime Register of Shipping

SMTU – St. Petersburg State Marine Technical University

VSY – Vyborg Shipyard

INTRODUCTION

Applied to the ice-going ships, design of ice strengthened hull structures is conventionally carried out according to the currently valid requirements of national and / or international regulatory documentation. It could comprise the requirements for ice strengthening of ice class ships within the Rules of various classification societies, the structural requirements for polar class ships within the Unified Requirements of the IACS, the specific requirements within other standards, codes, guidelines, etc. So, the process of determining the geometric dimensions of structural members, which meet the requirements of regulatory documentation, is accepted to term as a parametric design.

In recent years, active development and introduction of direct calculations are taking place in respect of ship hull structures. Such calculations are primarily focused on checking the strength of web hull members, including those situated within the ice strengthening regions and represented by load-carrying side stringers, web frames, horizontal and vertical diaphragms of double sides, etc. Numerical methods provide the basis for direct calculations, in particular, the finite element method in a static non-linear elastic-plastic formulation, which could be implemented using modern software systems for finite element analysis.

However, in any case, the ice strengthened structures of ship hull have to accept and to withstand the appropriate design ice loads, and therefore their correct estimation should be treated as a priority task.

The results of determining the ice loads on ship hull given as examples in this article were obtained applied to the diesel-electric icebreaker “Vladivostok” built at the VSY and commissioned in 2015 (see Figure 1a). The main dimensions of specified ship are shown in Figure 1b, its displacement is about 14.3 kt for draught at the design waterline, and its total shaft power reaches 18.0 MW. The icebreaker under consideration has an ice class Icebreaker 6 as per the RS, with upgrading to an ice class Icebreaker 7 for ice strengthened hull structures. It is intended to perform the icebreaking operations of various types in the Baltic Sea in the winter-spring navigation period and in the Arctic Seas in the summer-autumn navigation period.

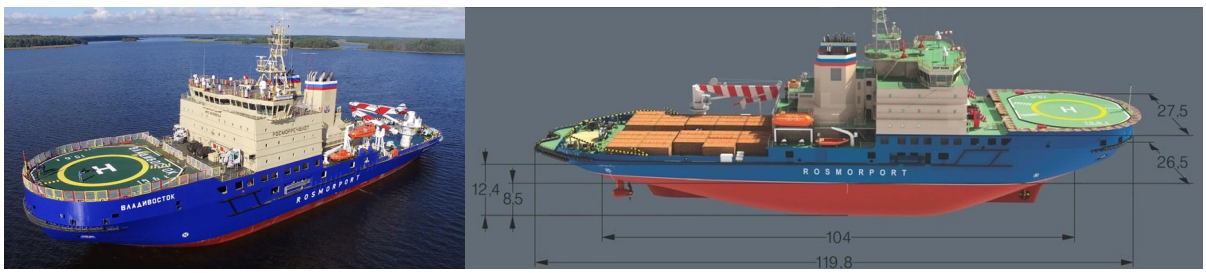

Figure 1. Diesel-electric icebreaker “Vladivostok”: a – general view; b – main dimensions

DETERMINATION OF ICE LOADS ON SHIP HULL ACCORDING TO THE REQUIREMENTS OF REGULATORY DOCUMENTATION

The currently valid requirements of the “Ice” RS Rules (RS, 2020) establish the minimum necessary level for ice strength of ship hull structures. They imply a common, unified approach to determining the ice-induced loads acting on ship hull and regulate their magnitude depending on ice class mark of a particular ship, its dimensions (displacement), hull form and shaft power (only for icebreakers and tugs).

As an integral quantitative characteristic, the so-called base mode of ship motion is put in correspondence with each ice class. This term defines a certain set of averaged conditions of ship navigation in ice, including the speed of ship motion in ice, the thickness and strength of ice cover, etc. At that, two base modes of ship motion are introduced for consideration, namely allowable and dangerous. Exceeding the allowable base mode leads to appearance of first plastic deformations in the structures, and exceeding the dangerous one is associated with the risk of receiving the damages to the structures as a result of interaction between ship hull and ice cover. Within the same ice class, the base mode is deemed to be identical for all ships, regardless of their type, dimensions and hull form. With that, assignment of ice class to a ship provides the presence of a stable ensured margin between allowable and dangerous conditions of ship navigation in ice. It should be noted that two underlying principles are formulated above, namely the principle of uniform safety standard and the principle of safety guarantee (Appolonov, 2016).

Thus, applied to a particular ship, the currently valid requirements of the “Ice” RS Rules establish the fixed values for ice load parameters. When performing a regulatory calculation, the possibility is excluded to set the external conditions of ship navigation in ice in an explicit manner, to arbitrarily vary them and to directly account for their individual influence on magnitude of ice loads. Furthermore, applied to the non-conventional ice-going ships, the experience in the design and operation of which is absent or extremely small to date, a considerable discrepancy is objectively observed between actual and base modes of ship motion. This fact is explained by impossibility to completely extrapolate the requirements under consideration to the area of outstanding characteristics of specified ships. In particular, utilization of currently valid requirements of the “Ice” RS Rules turns out to be restricted and needs additional special substantiation in respect of modern and advanced large-tonnage (with a length of more than 250 m and a displacement of more than 50 kt) cargo ships of high ice classes (Arc6 and higher) intended for sea transportation of oil and gas, as well as nuclear icebreakers of new generations distinguished by high output of power plant.

For all ice-going ships, the hull surface, which could be subject to the ice exposure, is conditionally divided into ice strengthening regions in the longitudinal (i.e. along the ship hull length) and vertical (i.e. along the ship side height and bottom) directions. Within the same ice strengthening region, the magnitude of ice loads is assumed to be constant. In the ice strengthening regions allocated below the ice belt, the ice loads are set as fractions of expected ice load in the appropriate ice belt region lengthwise through introducing the empirical conversion factors, which are obtained proceeding from the data on ice damages to the structures.

The ice-induced loads acting on hull structures situated within the ice belt regions are determined when considering the most typical scenarios of mechanical interaction between ship hull and ice cover. It is known that the area of forebody entrance / the area of afterbody exit is subject to the ice exposure in the case of direct and reflected impacts during the ahead / the astern rectilinear ship motion, as well as impacts during the complex curvilinear ship motion. The area of parallel middle body enters into interaction with the ice cover in the case

of reflected impacts during the rectilinear ship motion and impacts during the ship gyration (maneuvering).

According to the currently valid requirements of the “Ice” RS Rules, the direct impact (for all ice-going ships) and the reflected impact (for icebreakers) during the ahead rectilinear ship motion are taken as a design scenario to determine the local ice loads on area of forebody entrance. At the same time, in the ice strengthening regions allocated within the area of parallel middle body and the area of afterbody exit, assignment of ice loads is carried out based on empirical approach, which combines the experience in the design and operation of ice-going ships and the information on their damageability in the ice conditions. Application of this approach is associated with the absence of a formed complete system of base modes for ship gyration (maneuvering) and for astern rectilinear ship motion. The edition of the “Ice” RS Rules updated in 2019 (RS, 2019) is supplemented with the requirements for ice strengthening of ships intended for astern operation in ice, including in the part of determining the local ice loads on area of afterbody exit. However, even in this case, it deals only with adapting the appropriate calculation dependences factoring in the architectural and structural features of afterbody exit of a particular ship.

To determine the global ice loads on ship hull, the stempost impact against the edge of ice cover during the ship ramming constitutes a physically substantiated design scenario. It should be noted that the currently valid requirements of the “Ice” RS Rules do not provide this calculation, e.g. in contrast to the Unified Requirements of the IACS.

It is known that the hull form parameters, including waterline and frame inclination angles, change in a continuous manner both along the ship hull length and the ship side height. However, when determining the ice loads on ship hull, the actual values of specified parameters are analyzed through discretizing they within the area of forebody entrance (for all ice-going ships) and the area of afterbody exit (for double-acting ships), and only at the level of design ice waterline. Ultimately, a single hull section is accepted for consideration for each ice belt region, in which the most adverse combination of hull form parameters is observed. This assumption leads to overstatement of ice loads in other hull sections lengthwise. Furthermore, a certain decrease in the accuracy of results of regulatory calculation is contributed by utilization of approximating dependences to reproduce the dimensionless functions, which characterize the influence of hull form on magnitude of ice loads.

In the engineering practice, determination of ice loads on ship hull according to the requirements of regulatory documentation is usually implemented using specialized program modules. These program modules are integrated into large and complex software systems intended to perform computer-aided design and check calculations in respect of ice strengthened hull structures. In particular, it refers to the national software solutions entitled “RUSLAN” (developed at the KSRI in the early 2000s), “ISTRECC” (developed at the SMTU in the early 2010s) and “MARSOLS” (developed at the CNIIMF in the late 2010s). However, the software applications are also available focused exclusively on determining the ice loads on ship hull. For example, the computer program RN 2020611887 (Yakimov, 2020) allows performing a calculation of ice load parameters as required by various national and international regulatory documentation applied to the conventional ice-going ships, double-acting ships, icebreakers and tugs.

Figure 2 shows the results of regulatory calculation of design ice loads on ship hull, which was implemented according to the currently valid requirements of the “Ice” RS Rules applied to the icebreaker “Vladivostok” for draught at the design waterline. The ice load parameters represented by ice load intensity p and linear ice load q are distributed along the length of ship hull within the ice strengthening regions subject to be considered.

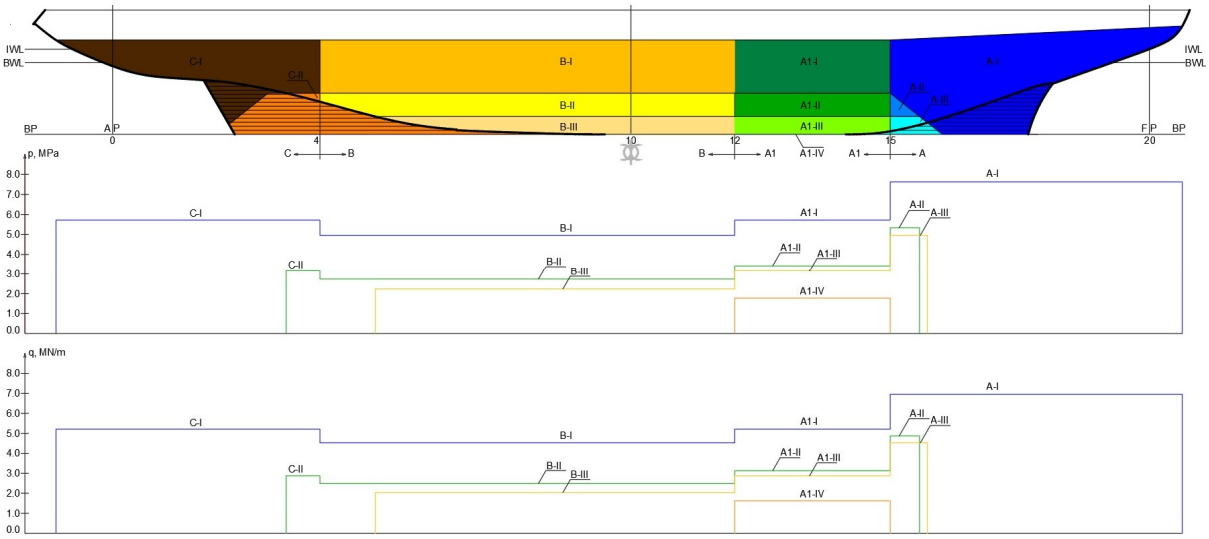

Figure 2. Results of regulatory calculation of design ice loads on ship hull: ice load intensity p and linear ice load q

DETERMINATION OF ICE LOADS ON SHIP HULL INVOLVING THE DIRECT CALCULATION METHODS

With regard to the foregoing, involvement of direct calculation methods constitutes a more versatile and flexible, and in some cases the only acceptable approach to determining the ice-induced loads acting on ship hull, despite the relative laboriousness of their practical implementation. However, at the present time, practical implementation of direct calculation methods usually does not cause any technical difficulties when using modern software tools distinguished by considerable computer speed and memory amount. At that, the selected methods should be theoretically developed and sufficiently verified.

The direct calculation methods are based on physical models for mechanical interaction between ship hull and external environment, including the ice cover, and directly take into account the specifics and the details of a particular interaction process. It should be noted that the contemporary worldwide trends in improving the requirements of regulatory documentation indicate an increase in the significance and priority namely for direct calculation methods when solving the problems related to assessing and to forecasting the external environmental effects of any nature on marine infrastructure facilities (Yakimov & Letova, 2019).

The following method for direct calculation of ice loads has found widespread application and successfully proven itself in the multi-year national practice of designing the ice strengthened hull structures of ice-going ships (Popov, et al., 1967). The method under consideration deals with a model for oblique and eccentric inelastic impact (collision) of two bodies that are a translationally moving ship hull and a motionless ice cover. Introduction of mass and speed reduction factors makes it possible to convert the oblique and eccentric impact of ship hull against the ice edge into the direct and central one and to study the impact process hereafter actually as a motion of a single system of bodies with some reduced mass and some reduced speed in the direction of normal drawn at the impact point (see Figure 3).

In terms of external dynamics, this method is based on postulates of classical impact theory (assuming the instantaneous interaction), fundamental conservation laws for energy, for linear momentum and for angular momentum, principle of least action and differential equations for motion of a physical system. The forces arising within the hull-to-ice contact zone are determined by magnitude of linear momentum, which the ship loses during the impact

process, and the local ice loads on ship hull are found as a result of solving the appropriate general differential equation for motion.

In terms of internal mechanics, this method comprises the calculation dependences of hydrodynamic model for solid body impact against the ice, which is applied to set the contact pressure. The hydrodynamic model implies solving the problem concerning the extrusion of a relatively thin interlayer having a finely dispersed structure and both viscous and plastic properties from the contact zone during the solid body penetration into the ice. To describe the medium motion, a set of Hencky non-linear differential equations for a viscoplastic body is provided. After linearizing, it is reduced to a simplified set of Reynolds differential equations defining the quasi-static extrusion of a thin layer of viscous liquid (neglecting the interlayer plasticity) between two surfaces that are the surface of penetrating solid body and the surface of non-failed ice bulk.

Utilization of direct calculation method outlined above allows estimating various local parameters of dynamic interaction between ship hull and ice cover, including ice load parameters, in any hull section lengthwise and heightwise factoring in the geometric features of hull surface. The specified parameters are determined depending on actual conditions of ship navigation in ice that are the navigation water area and season, the state of ship loading, the trajectory, direction and speed of ship motion in ice, the morphological type of ice cover and its geometric, mass, physical and mechanical characteristics, and other factors. At that, the ship could initially have any dimensions (displacement) and hull form.

For many years, the direct calculation method under consideration represented in a normalized manner provides the regulatory and methodology basis for requirements of the "Ice" RS Rules in the part of determining the ice-induced loads acting on ship hull, thus confirming its adequacy and performability to the full extent.

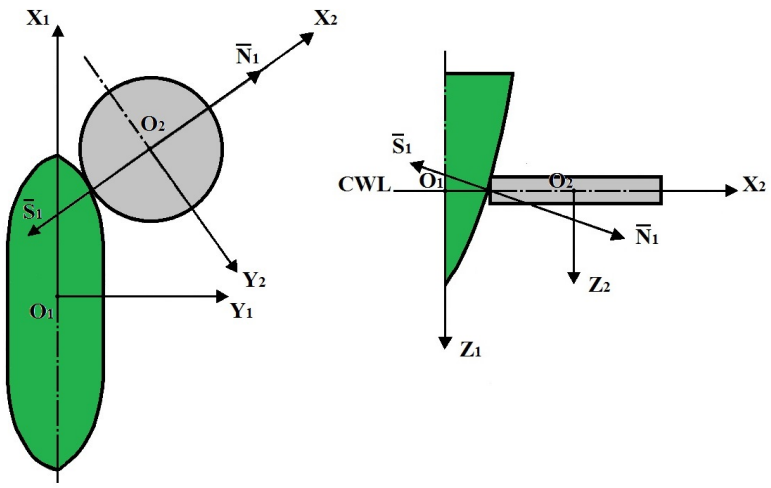

Figure 3. Scheme for direct impact of ship hull against the ice edge

NATIONAL SOFTWARE FOR DIRECT CALCULATION OF ICE LOADS ON SHIP HULL

As stated above, effective practical implementation of direct calculation methods does not turn out to be possible without using specialized software, including for direct calculation of ice loads on ship hull.

For this purpose, in the early 1980s, the software application entitled "ICECALC" was developed at the Ship Structure Department of the LSI (LSI, 1982). It should be noted that the employees of department under consideration have made a significant contribution to

create and to evolve the approaches to determining the ice-induced loads acting on ship hull, which are accepted in the national practice of designing the ice-going ships. Thereafter, for more than two decades, this software application was extensively used to perform appropriate calculations, repeatedly improved and updated.

In 2009-2013, the multifunctional software solution entitled “ICESTAR” was sequentially designed, developed and tested at the Ship Structure Department of the SMTU within the framework of long-term cooperation with the Research Department of the BV (Dudal, et al., 2011). Ultimately, it was successfully prepared for cross-licensing and commissioning procedures. One of the core functions provided for implementation using this software solution is the direct calculation of local ice loads on ship hull under various scenarios of mechanical interaction with the ice cover of various morphological types.

In 2014, the separate fragments of source code of the “ICESTAR” software solution, which are directly related to determining the ice loads, were partially supplemented, adapted to solve a wide range of tasks with a practical focus and finally converted into an independent computer program RN 2014618564 (Yakimov & Tryaskin, 2014). In 2014-2017, a number of applied research works were performed based on results obtained using this computer program at the Ship Structure and Technical Operation Department of the SMTU on orders of national ship design and shipping companies. Their subject has referred to the issues concerning the calculated substantiation of design characteristics of ice-going ships as required by ice strength, including the category of ice strengthening for ship hull, parameters of ice load on ship hull, parameters of allowable and dangerous modes of ship motion in ice, etc.

In 2019, the computer program RN 2019611825 (Yakimov, 2019) was released, which could be treated as a further stage of continuous development of specialized software for direct calculation of ice loads on ship hull. In general, this computer program constitutes a highly upgraded and consequently more mature version of computer program RN 2014618564. In particular, compared to the previous version, the functional capabilities were qualitatively extended, as well as the structural configuration, the input and output data arrangement and the computational tool set for execution of provided calculation procedures were optimized.

The software application entitled “ICELOADS” and its numerous modifications, including export ones, should be highlighted among the existing specialized software, which allows determining the ice loads on ship hull involving the direct calculation methods. This software application was developed at the Structure Strength and Reliability Division of the KSRI and extensively used to build the systems of base modes of ship motion (Appolonov, 2016). It is known that the specified systems underlie normalization of ice strength of ship hull structures and regulation of allowable conditions of ship navigation in ice within the currently valid requirements of the “Ice” RS Rules. Furthermore, the specialists of the KSRC have released the computer programs RN 2017663264 (Matantsev & Platonov, 2017) and RN 2013612432 (Nesterov, et al., 2013). The first one is intended for direct calculation of local ice loads on ship hull based on advanced model for dynamic ice failure under local crushing, and the second one is intended for direct calculation of global ice loads on ship hull based on model for stempost impact against the edge of ice cover during the ship ramming.

In this context, the program modules entitled “ICELOCAL” and “ICEGLOBAL” could also be mentioned (RS, 2017). The first one developed at the Ship Propulsion System Laboratory of the CNIIMF and the second one developed at the LLC ACEA Polytechnic are used to perform a direct calculation of local and global ice loads on ship hull, respectively. At that, both program modules are comprised in the known software solution entitled “ANCHORED STRUCTURES” dealing with modeling the processes of functioning the marine infrastructure facilities.

AUTHORS' SOFTWARE FOR DIRECT CALCULATION OF ICE LOADS ON SHIP HULL

The computer program RN 2019611825 (Yakimov, 2019) developed by authors is intended to perform a direct calculation of local and global parameters of mechanical interaction between ship hull and ice cover, including ice load parameters.

The source code of computer program under consideration is written in the high-level programming language Fortran 90 within the integrated development environment Compaq Visual Fortran, with actively involving the numerical analysis routines comprised in the International Mathematics and Statistics Library (known as the IMSL). To solve the selected programmable task, utilization of identified procedures is provided represented in the form of subroutines and functions. They contain the description of a strictly defined set of actions (set of statements) and ensure its sequential execution when calling.

According to the modular principle of software organization, the computer program is divided into independent fragments, which are functionally completed, arranged as separate text files with the source code and linked to each other at the execution level. To date, it counts a total of ten functional program modules. The detailed flow chart submitted in Appendix A displays the implementation sequence for direct calculation of local and global parameters of mechanical interaction between ship hull and ice cover using the computer program RN 2019611825. Furthermore, it gives a general insight into the structural configuration of this computer program, since the main procedures subject to be executed are attached to the appropriate program modules highlighted in the different colors.

Execution of computer program is implemented within the operating systems of the Windows family through the text-based user interface (TUI). At the present time, the graphical user interface (GUI) is under development as an additional service. Before starting program execution, the operator should prepare a block of initial information in a proper manner. It contains four arrays of input data concerning the ship as a whole, the ship hull, the interaction scenario and the ice cover, respectively. At that, the separate text files with the input data have both specific (preset) structure and content. After successfully completing program execution, the single text file with the output data is automatically generated, to which the name “result” and the extension “csv” are assigned. This file consolidates all relevant quantitative information related to solving the selected programmable task, as well as necessary descriptive and explanatory text comments.

As stated above, the computer program RN 2019611825 (referred to as the current version) is distinguished by functionality extended to a considerable degree, compared to the computer program RN 2014618564 (Yakimov & Tryaskin, 2014) also developed primarily by authors (referred to as the previous version). Applied to both computer programs, the results of comparative analysis of functional capabilities are submitted in a systematized manner in Appendix B.

Figures 4 to 6 show the results of direct calculation of design ice loads on ship hull, which was implemented using the computer program RN 2019611825 applied to the icebreaker “Vladivostok” for draught at the design waterline, as follows:

• Figure 4 shows the local ice loads on ship hull, which arise as a result of consecutive direct and reflected side impacts against the edge of motionless ice field of finite thickness subject to the global failure during the ahead rectilinear ship motion in the winter-spring navigation period. The ice load parameters represented by geometric (including the depth of side penetration into the ice dz, the height of contact zone b_c and the length of contact zone l_c) and force (including the ice load intensity p, the linear ice load q and the total contact force P_{sum}) components are distributed along the length of area of forebody entrance;

• Figure 5 shows the global ice loads on ship hull, which arise as a result of stempost impact against the edge of motionless ice field of finite thickness subject to the global failure during the ship ramming in the winter-spring navigation period. The ice load parameters represented by shearing force N_{shear} and bending moment M_{bend} acting in the vertical plane are distributed along the length of entire ship hull;

• Figure 6 shows the local ice loads on ship hull, which arise as a result of ship nipping in the motionless ice field of finite thickness in the winter-spring navigation period. The ice load parameters represented by geometric (including the depth of side penetration into the ice dz, the height of contact zone b_c and the length of contact zone l_c) and force (including the ice load intensity p, the linear ice load q and the total contact force P_{sum}) components are distributed along the length of entire ship hull.

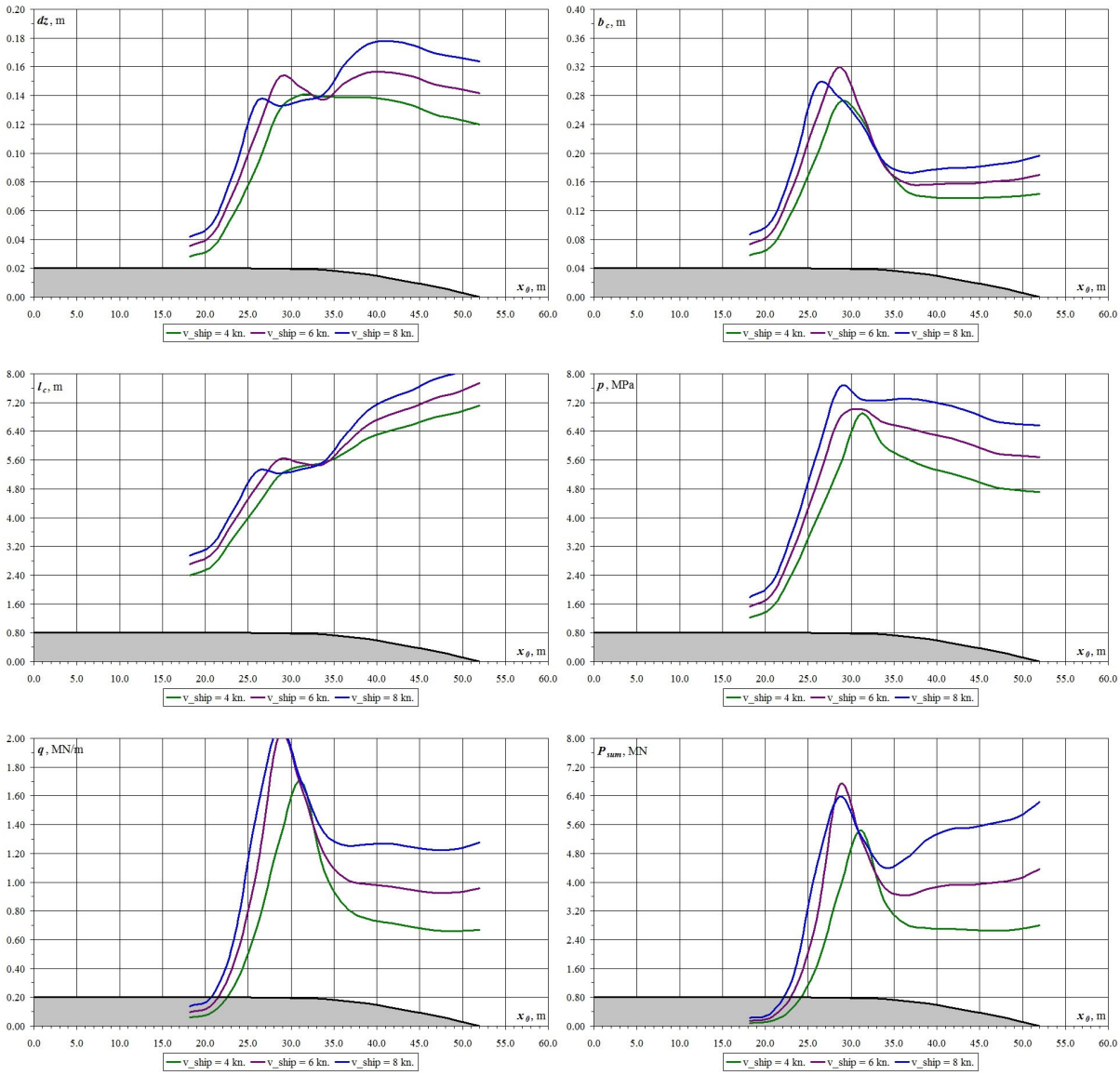

Figure 4. Results of direct calculation of local ice loads on ship hull under dynamic interaction with the ice cover: a – depth of side penetration into the ice dz; b – height of contact zone b_c; c – length of contact zone l_c; d – ice load intensity p; e – linear ice load q; f – total contact force P_{sum}

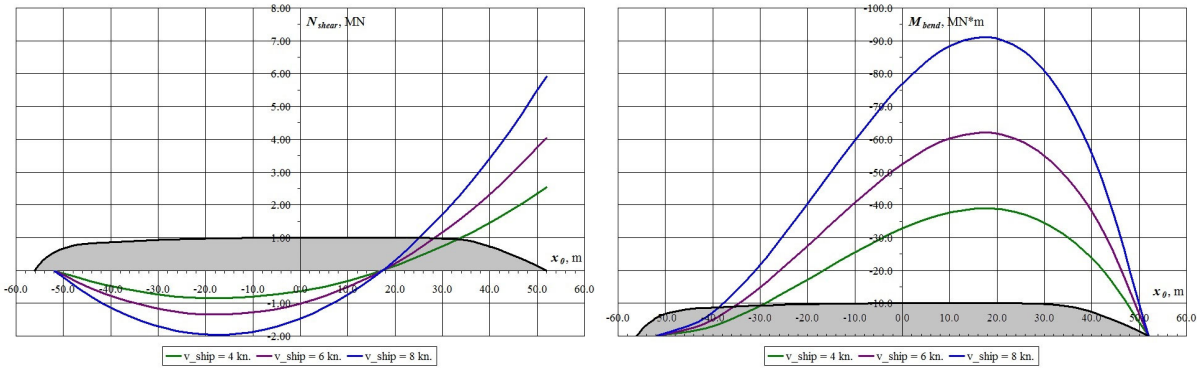

Figure 5. Results of direct calculation of global ice loads on ship hull under dynamic interaction with the ice cover: a – vertical shearing force N_{shear}; b – vertical bending moment M_{bend}

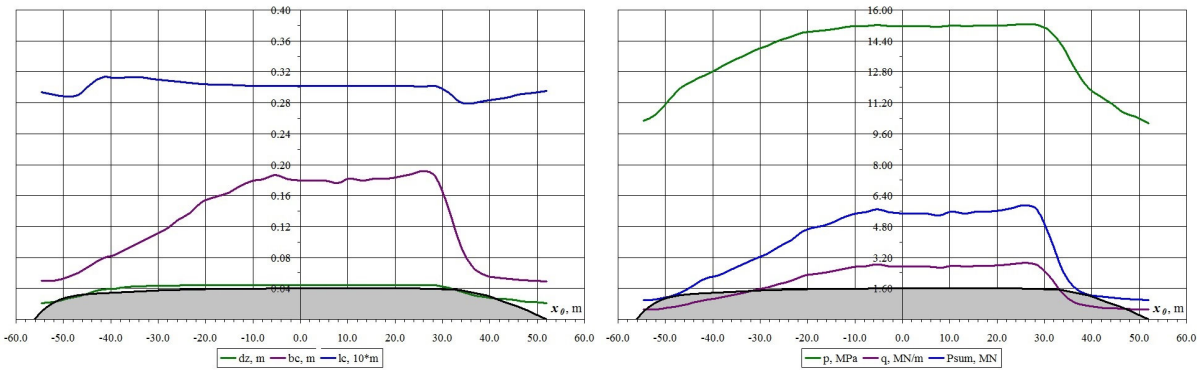

Figure 6. Results of direct calculation of local ice loads on ship hull under static interaction with the ice cover: a – depth of side penetration into the ice dz, height of contact zone b_c and length of contact zone l_c; b – ice load intensity p, linear ice load q and total contact force P_{sum}

CONCLUSIONS

The ice strengthened structures of ship hull have to accept and to withstand the appropriate design ice loads, and therefore their correct estimation should be treated as a priority task.

In the present article, the following general issues were considered dealing with determining the design ice loads on ship hull using specialized software:

• Two main interlinked approaches to determining the ice-induced loads acting on ship hull were presented and studied that were regulatory calculation and direct calculation. The first one is based on accounting for requirements of regulatory documentation, and the second one implies involving the physical models for mechanical interaction between ship hull and ice cover;

• The brief overview was done concerning the specialized software intended to implement the direct calculation of local and global ice loads on ship hull and found application in the national engineering practice;

• The general description was given concerning the computer programs being relevant to date and developed with the direct participation of authors;

• With regard to the specified computer programs, the key aspects were outlined related to the development and execution environment, the structural configuration and implementation sequence, the input and output data arrangement;

• The particular attention was paid to the comparative analysis of their functional capabilities, the results of which were submitted in a systematized manner.

Based on information stated above, it should be concluded that application of direct calculation methods to assess and to forecast the external environmental effects of any nature, including ice effects, on marine infrastructure facilities conforms to the contemporary worldwide trends to the full extent. Proceeding from this fact, their comprehensive introduction into the real process of designing the ice-going ships appears to be reasonable and demanded, but at the same time requires the availability of specialized software.

REFERENCES

Appolonov, E.M., 2016. Ice Strength of Ships Intended for Year-Round Arctic Navigation. SMTU: Saint Petersburg. (In Russian).

Appolonov, E.M., Didkovsky, A.V., Kuteinikov, M.A., & Nesterov, A.B., 2011. Improvement in Design Models for Ice Load Evaluation under Vessel Impact against Ice. Ships and Offshore Structures, 6(3), pp. 249-256.

Appolonov, E.M. & Platonov, V.V., 2019. A New Model for Dynamic Ice Failure as a Basis to Improve the Requirements of the RS Rules for Ice Strengthening of Ships and Icebreakers. Transactions of the Krylov State Research Centre, 4(390), pp. 99-116. (In Russian).

Dudal, A., Besse, P., Yakimov, V.V., & Tryaskin, V.N., 2011. Numerical Tool for Basic Design Appraisal of Ice-Going Vessels. Bulletin de l'Association Technique Maritime et Aéronautique, B-110, 2608.

Golovkin, A.A. & Nesterov, A.B., 2009. Determination of Parameters of Ship Motion and Ice Load when Ramming Applied to the Arctic Ice-Going Ships. Transactions of the Krylov Shipbuilding Research Institute, 4(330), pp. 41-52. (In Russian).

International Organization for Standardization (ISO), 2019. International Standard ISO / FDIS 19906:2019. Petroleum and Natural Gas Industries – Arctic Offshore Structures. Annex A. Additional Information and Guidance, Geneva: ISO.

Kerr, A.D., 1976. The Bearing Capacity of Floating Ice Plates Subjected to Static or Quasi-Static Loads. Journal of Glaciology, 17(76), pp. 229-268.

Kurdyumov, V.A., 1987. On Loads under Ship Nipping in Ice. Transactions of the Leningrad Shipbuilding Institute: Problems of Design of Hull Structures, 218, pp. 4-10. (In Russian).

Kurdyumov, V.A. & Kheysin, D.E., 1976. A Hydrodynamic Model for Solid Body Impact against the Ice. Applied Mechanics, 12(10), pp. 103-109. (In Russian).

Leningrad Shipbuilding Institute (LSI), 1982. Investigation of Force Effect of Ice on Ship Hulls and Development of a Method for Calculated Determination of Ice Load Values, Leningrad: LSI. (In Russian).

Matantsev, R.A. & Platonov, V.V., 2017. Program to Determine the Parameters of Design Ice Load on Hull of an Ice-Going Ship "MDRL ICE LOAD". Certificate of State Registration of a Computer Program, 2017663264.

Nesterov, A.B., Golovkin, A.A., & Ankudinov, O.S., 2013. Program to Calculate the Global Ice Loads and Accelerations when Ramming. Certificate of State Registration of a Computer Program, 2013612432.

Popov, Yu.N., Faddeyev, O.V., Kheysin, D.E., & Yakovlev, A.A., 1967. Strength of Ships Navigating in Ice. Sudostroyeniye: Leningrad. (In Russian).

Russian Maritime Register of Shipping (RS), 2017. Collection of Regulating Documents. Book 25, Saint Petersburg: RS. (In Russian).

Russian Maritime Register of Shipping (RS), 2019. Rules for the Classification and Construction of Sea-Going Ships. Part XVII. Distinguishing Marks and Descriptive Notations in the Class Notation Specifying Structural and Operational Particulars of Ships, Saint Petersburg: RS.

Russian Maritime Register of Shipping (RS), 2020. Rules for the Classification and Construction of Sea-Going Ships. Part II. Hull, Saint Petersburg: RS.

Ryvlin, A.Ya. & Kheysin, D.E., 1980. Trials of Ships in Ice. Sudostroyeniye: Leningrad. (In Russian).

Sazonov, K.E., 2010. Theoretical Principles of Ship Navigation in Ice. KSRI: Saint Petersburg. (In Russian).

Yakimov, V.V., 2019. Direct Calculation of Parameters of Dynamic Interaction between Ship Hull and Ice Cover. Certificate of State Registration of a Computer Program, 2019611825.

Yakimov, V.V., 2020. Calculation of Parameters of Ice Load on Ship Hull According to the Requirements of Regulatory Documentation. Certificate of State Registration of a Computer Program, 2020611887.

Yakimov, V.V. & Letova, T.I., 2019. Mathematical Modeling of Ice Loads on Ship Hull in View of Their Stochastic Nature: Method Development & Solution Implementation. Proceedings of the 25th International Conference on Port and Ocean Engineering under Arctic Conditions – POAC 2019, 977.

Yakimov, V.V. & Tryaskin, V.N., 2013. Use of the Stochastic Simulation Technique for Estimation of the Ice Cover Strength by Interaction with Ship Hull. Proceedings of the 22nd International Conference on Port and Ocean Engineering under Arctic Conditions – POAC 2013, 3071.

Yakimov, V.V. & Tryaskin, V.N., 2014. Calculation of Parameters of Ice Loads on Ship Hull under Impact against the Ice Cover. Certificate of State Registration of a Computer Program, 2014618564.

APPENDIX A. IMPLEMENTATION SEQUENCE FOR DIRECT CALCULATION OF LOCAL AND GLOBAL PARAMETER S OF MECHANICAL INTERACTION BETWEEN SHIP HULL AND ICE COVE R USING AUTHORS' SOFTWARE